**ENGINE, TURBO - Z26SPD92AN/AH/BN/BH (C1208818)**

**2026 RZR - RZR PRO S ULTIMATE (R01) - Z26SPD92AN/AH/BN/BH**

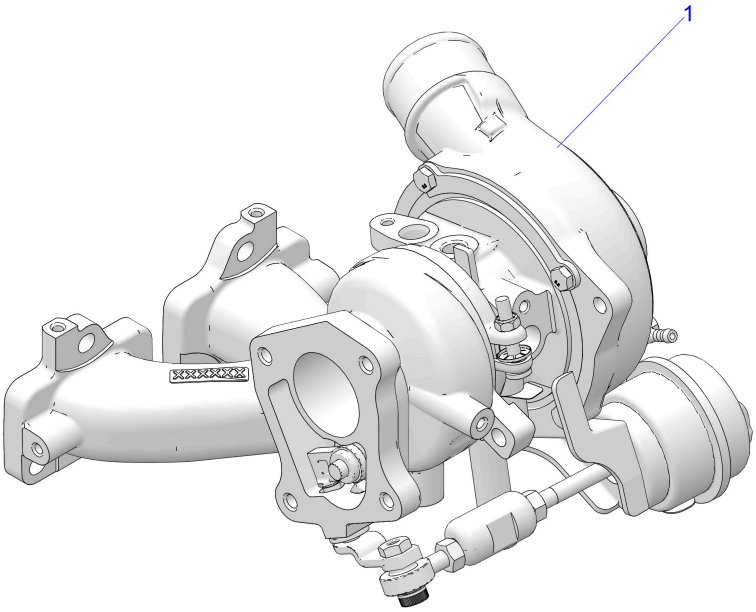


© 2021 Polaris Industries Inc.

C1208818

| *Reference #* | *Part#* | *Description* | *Quantity* |
|---|---|---|---|
| | 2205929 | K-ACTUATOR [NOT ILLUSTRATED] | 1 |
| | 2205930 | K-ACTUATOR HARDWARE [NOT ILLUSTRATED] | 1 |
| | 2205932 | K-BANJO,BOOST,REF [NOT ILLUSTRATED] | 1 |
| | 2209080 | K-GASKET [NOT ILLUSTRATED] | 1 |
| 1 | 1208928 | ASM-TURBO-R,COMPLETE [INCL. ALL] | 1 |

Copyright 1996-2026 Polaris Industries U.S.A All rights reserved.